QSX-PE

March 2009

A view of the pyramid erected by Sir Rufane Donkin, in memory of his wife Elizabeth, who had died in India, and after whom the city of Port Elizabeth is named.

This Newsletter is published by the Port Elizabeth Amateur Radio Society
P.O. Box 10402, LINTON GRANGE, 6015

Editing by Eric ZS2ECH

QSX-PE - Newsletter for the discerning Radio Ham

Download QSX from www.zs2pe.co.za

PEARS Monthly Meeting

ZS2ECH & ZS2IW's Namaqualand flower trip 2008 Slideshow

Tuesday, March the 17th, 7:30 pm for 8 pm

at the Londt Park Sports Club, Ralston Road, Fernglen

Dear fellow Radio Amateurs and PEARS members,

Things are happening in PEARS…Are you part of it? Man, I tell you, QSX seems to be happening all the time let alone once a month and it really feels like yesterday that I submitted my last column, I must emphasise how fortunate we are to have Eric help out with QSX. On that note, I would personally like to extent my and once again PEARS condolences to Ashley on the loss of his Wife. Ashley you and indeed your whole family are in my Prayers.

This month, as mentioned before, a few of us are going to attempt a first in setting up and operating a multi operator multi transmitter contest station for CQ WPX SSB. This contest is one of the big 6 world wide contests. We have had no requests from anyone to try out for the vacant spot on the team and it amuses me no end. Do you have any respect for your own operating ability? Think about it. Also this month sees the start of the RAE classes for the May exam. We have had an indication that 22 candidates will be sitting for the exam in Port Elizabeth. This must be some sort of record. However whether or not all 22 will see it through will remain unanswered for now, however I wish all of the candidates the best of luck.

The classes start on March the 4th at the premises of Telesure in CJ Langenhoven Avenue below the Bridge at Greenacres. I will attempt to be the tutor. If you have not yet contacted me do so soon, because we are physically running out of space in the venue and you may have to resort to self tuition or wait until the November Classes. With that I look forward to seeing all of you at the next club meeting. Please remember that the club is about you and without your support it may as well not exist so….

Amateur radio is the only fail safe communication in the world…and that's the way it is!

73

Donovan, Chairman PEARS

PEARS SUBS

It's that time of the year again when your PEARS subs are due. Full member R80, Spouse and Student R30.00. Please see Page 15 for the Society's bank details and remember to use your callsign for reference.

HAMNET / ECARES NEWS March 2009

As I have mentioned often enough before, radio amateur involvement in emergency communications is low key and indeed we are seldom enough involved in any emergency operation. So it should be as amateur radio is just a hobby. We never know though when it is the calm before the storm and we should be able to serve the community as effectively as possible. As I have also said often enough before, participation in contests, dxing, etc. is a good way to improve our operating abilities and station efficiency.

I am considering the organization of get-togethers from time to time where we can swap ideas, demonstrate equipment and do tests. We had one along Walker Drive in April, 2008 with some twenty members attending. A few mentioned that we should do this again. Please let me know if you would like to attend more such functions. If I get sufficient response, I will organize such activities.

73,
Al Akers, ZS2U

WARNING

During November 2008 a Vodacom debit order for an amount of R108.00 suddenly appeared on the PEARS bank statement. I went to Nedbank to query this and they said that I should contact Vodacom as the item originated from them.
I went to the Vodacom Customer Care Centre at Greenacres where they made a note of what had happened and said that they would pass it on to their fraud centre.
A few days later I got a call from Vodacom to ask if I could fax them all the relevant information. I thought that all this had already been done by the Customer Care Centre but anyway I repeated the process adding a letter demanding an immediate refund.
Nearly a month went by without any response from Vodacom. I then went back to Customer Care and after a number of calls by them; they informed me that their fraud department was still looking into the matter. A day or two later I received a call from the fraud department to say that the R108 would be refunded within a couple of days. I then pushed them to also pay the bank debit order fee that was charged.
It took another two weeks before they eventually did refund the amount including the bank charge.
MORAL: You have to check and reconcile your bank statements every month for anything that shouldn't be there. Fraud is rife in this country and everyone is at risk.

P.S. Today I went to the bank to get a bank statement. There was a lady at the information counter getting a new debit or credit card because she had unwisely responded to a "SARS" request for her card details over the internet which turned out to be a scam. Apparently the request looked so genuine; she was convinced that the email had come from the Revenue Service.

Clive ZS2RT

2009 Society Meeting Schedule

Month	Meeting Date	Topic
March	17th	ZS2ECH & ZS2IW's Namaqualand flower trip 2008 slideshow
April	21st (day before elections)	Search and Rescue – how it happens - ZS2ROB
May	19th	Digital interfacing for dummies – ZS2EZ. A practical presentation on how easy it can be…
June	16th?? (Public Holiday)	IRLP – how it works and what it does, also introducing the Mount Rd repeater site, home of the IRLP node
July	Tuesday before the VW Rally	VW Rally briefing meeting, hand out documentation, T shirts etc
August	18th	Astronomy – presenter not confirmed
September	15th	DX for dummies – ZS2DL
October	20th	2010 contingency communications networks (building on the Y2K initiative) – ZS2AAW
November	17th	End-of-year social gathering, cheese & wine, finger supper etc.
December	No meeting	
January 2010	19th	New developments in digital communications software & Update on DX-LAB suite – ZS2EZ
February 2010	16th	Movie Clip evening – bring your interesting DVD or mpg and show the club.
March 2010	16th	WiFi update, including site photos etc
April 2010	20th	PIC project evening
May 2010	18th	

WRINKLY RAVERS

The Wrinklies met again on Thursday 5 February, with ten bodies attending. The meeting / eating place was Marilyn's Coffee Shop in Villiers Road, Walmer.

Everybody was more than satisfied with the venue, and it must be said that the staff accomplished miracles in the kitchen, considering that the establishment had been without power since the previous day. All the cooking was done on standby gas equipment.

The next get-together will be on Thursday 5 March, again at Marilyn's Coffee Shop, the usual time - 12 noon. All welcome.

MINUTES OF PEARS MONTHLY MEETING

Held at the Londt Park Sports Club on 17 February 2009 at 20h00

Welcome

The Chairman ZS2DL welcomed all present, especially Marge ZS2OB.

Before starting with the meeting proper, the Chairman asked members to stand and observe a minute's silence in memory of Janet, XYL of Ashley ZS2AG.

Attendance and Apologies.

As per the attendance register.

Acceptance of Minutes of Previous Meetings.

November 2008 meeting - Proposed: ZS2EC; Seconded: ZS2DL.
January 2009 meeting - Proposed: ZS2MM; Seconded: ZS2PF

Correspondence

Nil.

Matters arising

Nil.

Finance

The treasurer Clive ZS2RT reported on the society's finances. Members were reminded of a previous club decision that the details of the club's finances would not be published in QSX, the information being confidential to the club.

General

1. The Chairman explained why it had become necessary to produce guidelines for operating IRLP on the Town repeater. The guidelines will be published in QSX and members are asked to please abide by them.
2. The AGM will take place on 16 May 2009, at the usual venue i.e. the Walmer Scout Hall. Members were reminded that any motions for the AGM had to be submitted not later than the monthly meeting preceding the AGM.
3. Chris will be doing major maintenance work at the Lady's Slipper repeater site on 19/20/21 February, and called for volunteers to assist him. He also intended installing the WiFi link at the site.
4. The Chairman reported that there were a total of 24 RAE candidates – 13 for ZU, 11 for ZR. No further candidates could be accommodated.
5. Chris informed the meeting of the forthcoming EC400 Off-Road Race, to take place on 17 & 18 April 2009. As he would not be available over that period, Beavan ZS2RL agreed to do the necessary organising. Indications were that about ten operators would be required. The following members at the meeting indicated that they would be available as operators: ZS2PG (results), ZS2U (control), ZR2TX, ZS2ND, ZS2ABZ, ZS2AE, ZS2RL.
6. The Chairman thanked Eric ZS2ECH for the excellent job he was doing as the temporary editor of QSX, until such time that Ashley ZS2AG saw his way clear to taking up the reins again.
7. The Chairman reported that he was unable to give a progress report on the dedicated accommodation for PEARS at the Londt Park Club, as he had been unable to meet with their management.
8. Andrew ZS2PA expressed his disapproval of the manner in which a club member's use of IRLP had been criticised publicly over the air. Agreed that this should not have happened, and the proposed IRLP guidelines (see 1. above) should obviate any future occurrences.
9. The meeting closed at 20:50.

Equipment ex the estate of Brian Weller ZS2AB was on sale, and after the tea break Barry ZS2EZ gave a presentation on electronic logging & QSL-ing.

160m dipole
by Andre ZS2AL

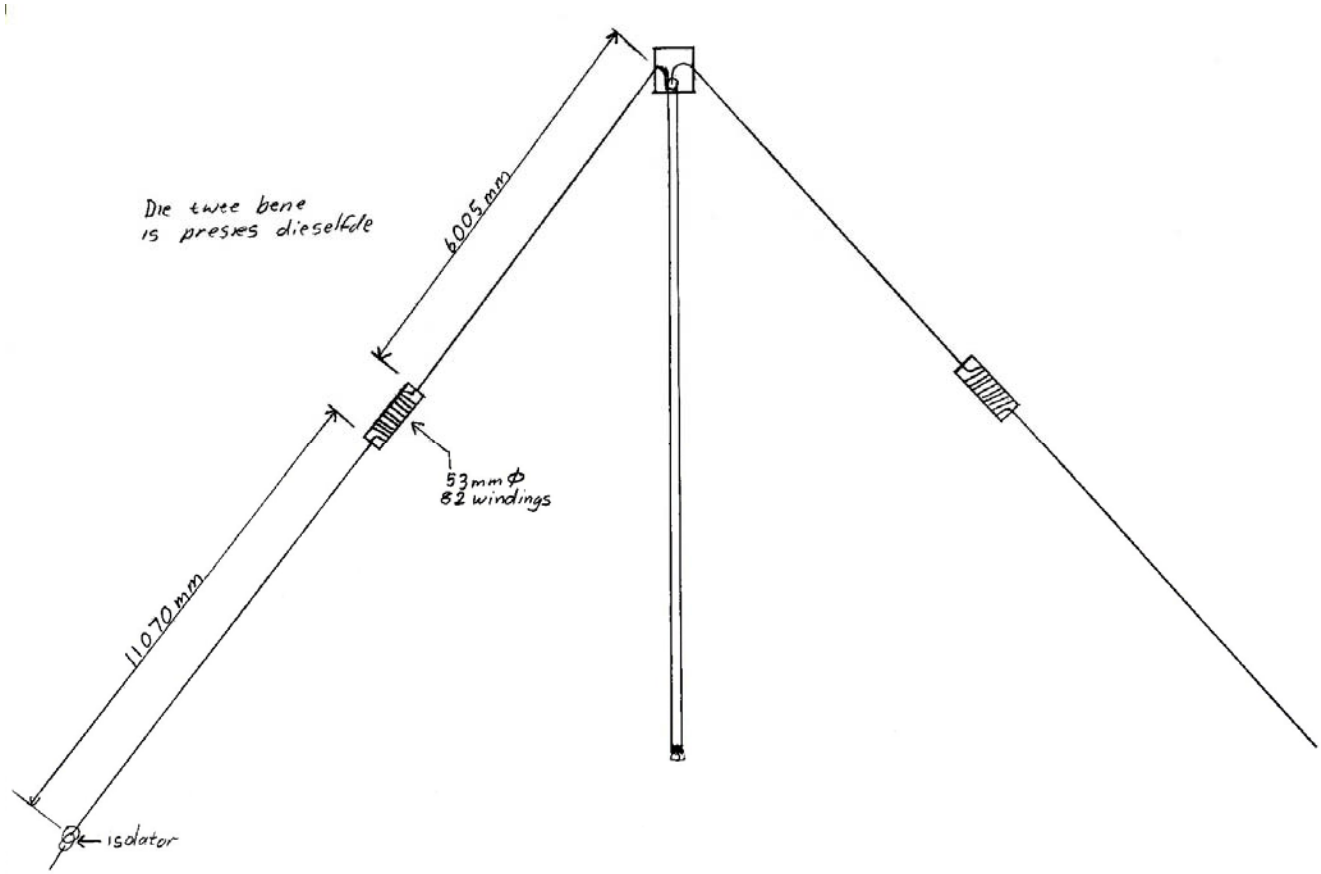

1. Die draad is Telkom se swart twin flex, met die soliede koper draadjie binne. Ek het van daai blou PVC besproeiings pyp gekry, die buite maat is presies 53mm
2. Boor twee gaatjies in lyn met die pyp, ryg die draad daardeur en begin die spoel draai. Draai die windings teen mekaar en so styf soos moontlik, aan die einde boor weer twee gaatjies en ryg weer die draad daardeur sodat die spoel nie afdraai nie.
3. Die voerlyn is toe nie so krities soos wat ek gedink het nie, myne se SWR is 1.2:1 en my voerlyn is baie korter as `n ¼ golflengte.
4. Die antenna is baie sensitief, so ander drade en grondvlak gaan `n verskil maak aan SWR, 5 cm gaan ook `n groot verskil maak as `n persoon begin trim aan die bene vir die beste SWR.

##########

USB Connections:

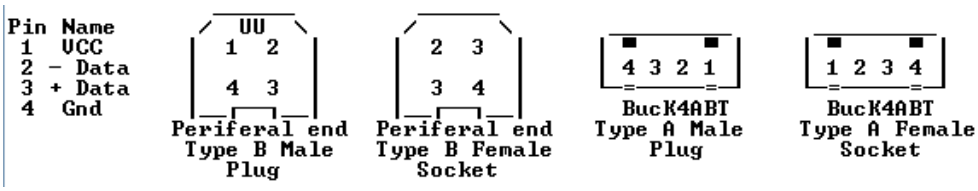

Hub PSU requirements: 5 V @ 500 mA per port. So a 4 port hub needs a 5 V 2 A PSU.

An experimental DSB/CW QRP rig for 20 and 40 meter bands

By Francesco Morgantini IK3OIL

Please visit Francesco's web page at: www.ik3oil.it for more info on this and other projects.

The project in brief

The building of an HF phone rig today isn't surely a simple job; however I'd like to propose an easy-to make project, suited for portable or emergency use. As usual, some compromise must be accepted. Let's briefly consider the good and bad points.

Strengths:

- A simple project, within most of home-brewers capabilities.
- Very simple tuning, a single stage to align, besides VFO frequency adjusting.
- Easy to find, cheap components
- Reduced dimensions and low power requirement, a totally portable rig

Weaknesses:

- DSB modulation: that is suppressed carrier and double sideband. This type of signal may be received by SSB rigs (both in LSB and USB mode) but it doubles the band width compared to an SSB signal, this should not be a problem given the low power employed (1.5 W). However the efficiency is three times higher respect to AM modulation.
- Direct conversion receiver: it performs well for SSB and CW emissions, but cannot receive DSB signals; therefore two rigs like this one cannot communicate each other in DSB. In practice an SSB rig must be located at the opposite side. The sensitivity and selectivity are those you may expect from a circuit like this one, however they seem to be adequate for the use.

I think that the project simplicity and the overall performance may well compensate these limitations, allowing "almost" everyone to experiment with a "dual mode" rig which, if matched to a good antenna, can operate by phone on HF bands. The described versions are suited for 40 and 20 meters bands.

The DSB modulation

It's worth while to spend some words about the DSB modulation. It's simply a type of amplitude modulation (AM). It is common knowledge that an AM signal is composed by a carrier and two sidebands, which take the whole information. The figure below represents an AM signal at 14.000 KHz, modulated with a 5 KHz band wide BF signal.

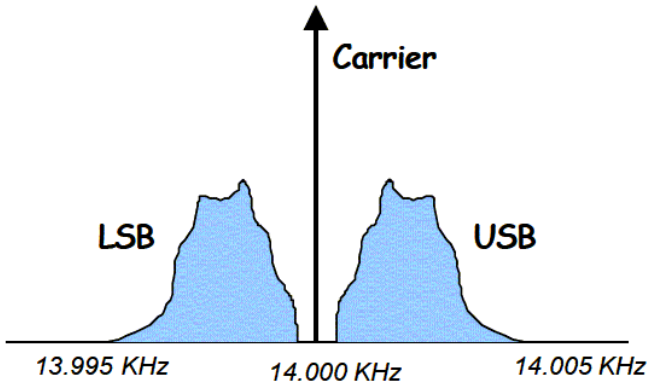

It may be seen that the useful information (BF signal) may be sent by transmitting only one of the two sidebands, and this is the SSB principle, which allows to optimize the efficiency and to halve the bandwidth. To produce an SSB signal we may first suppress the carrier with a balanced modulator, so as to obtain a double sided, suppressed carrier (DSB) signal, next the unwanted sideband may be eliminated by a narrow crystal filter. The process is somewhat complex and requires a frequency conversion system, since the DSB signal must be obtained at the fixed crystal frequency. In this project we stop at the first step of the process, using directly the DSB signal. So doing we simplify the circuit, obtaining however a good efficiency level due to the carrier suppression. A DSB signal may be received by a common SSB rig, since it's IF filter is capable to cut the undesired sideband.

The RTX schematics

The receiver is a direct conversion unit. It is composed by a double tuned preselector, equipped with a BF965 mosfet, delivering a 10 dB gain, and a product detector using a "classic" NE602 [(2)] (further 18 dB of gain). A variable capacitor C4 allows adjusting the sensitivity according to the connected antenna, so we

may find a right compromise to limit the effects of the strong broadcastings operating at the band edges. The detected audio is amplified by a 2N2222 transistor and an LM386 [3] IC delivering a few hundreds mW into an 8 Ohm speaker.

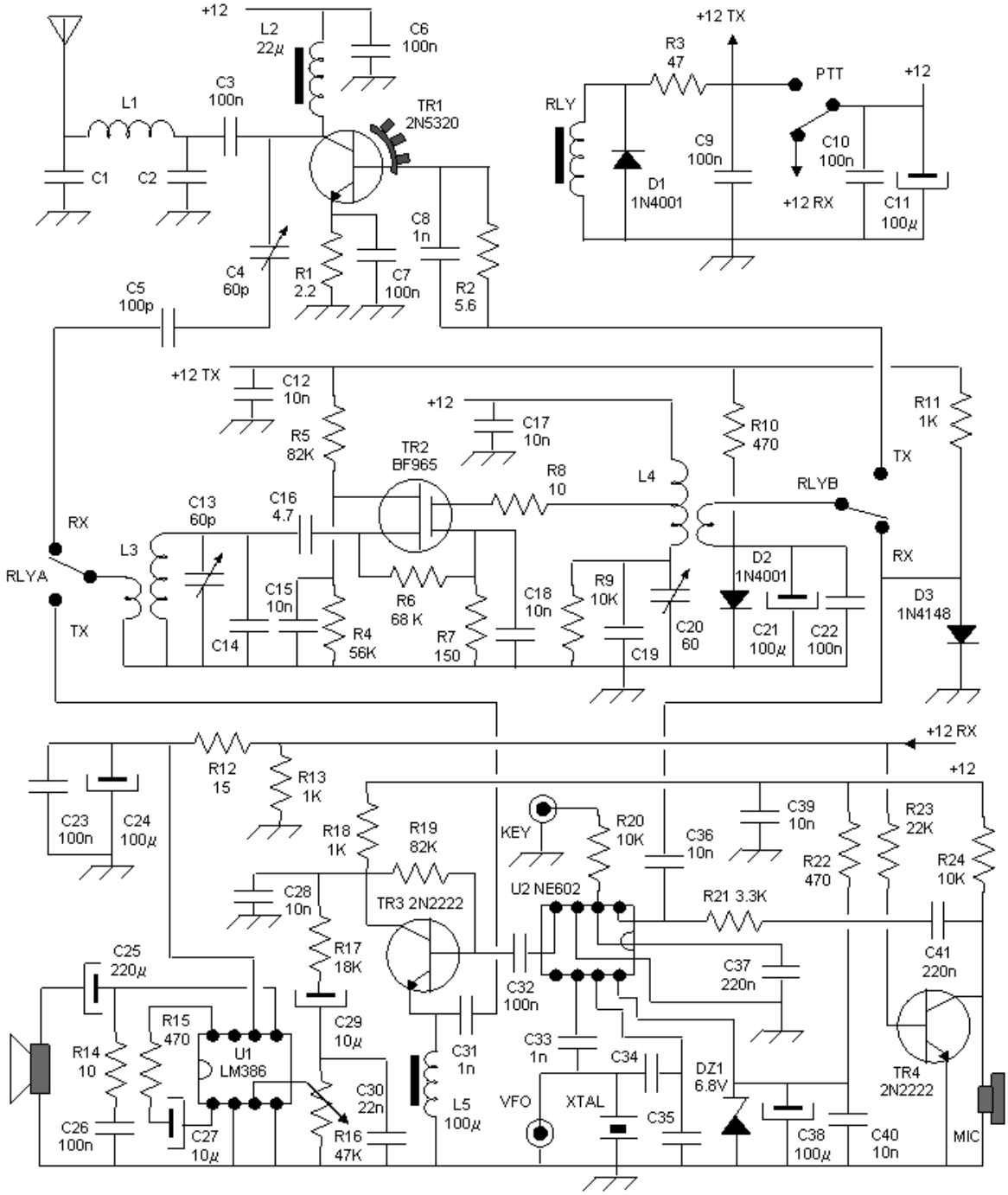

The transmitter employs the same NE602 as a balanced modulator, while TR3 (2N2222) acts as an emitter follower. The mosfet stage is now employed as a driver, with an adequate voltage applied to the gate 2, so as to raise the output signal level up to 30-40 mW. The final stage is equipped with a common 2N5320, followed by a simple Pi filter. The output power is about 1.5 W. Notice that the L2 inductor must bear the final stage current (about 200 mA) with a little voltage drop, so do not use a too little component. The mike is a fet pre-amplified unit, TR4 inhibits its working while in RX mode.

The TX/RX switching system uses a PTT mechanical switch which delivers the supply voltage to RX / TX sections and drives a two exchanges micro relay. The relay switches the input and output lines in the mosfet amplifier, so allowing its double function. Notice that the mosfet's gain and power delivery are controlled by the R5 resistor on gate 2, applying the control voltage only in TX mode. So doing we can avoid overloading of the NE602 mixer in RX mode, limiting annoying interferences from broadcasting. The same voltage biases the D3 diode so as to inhibit RF signal from reaching the balanced modulator input.

The RIG may be built in two versions:

- Fixed frequency, using a crystal cut to the desired frequency (a cheap 14.318 KHz computer crystal may be used for 20 m band). In this version C34 and C35 capacitors, both 47 pF value, must be mounted.
- VFO driven (description follows in the next chapter). In this case only C35 capacitor, 1 nF value, must be mounted.

The PCB board is suited to both versions.

RTX components list:

C3 : 100 nF	C20 : 60 pF trimmer	C35 : see text	R9 : 10 KΩ	R24 : 10 KΩ
C4 : 60 pF trimmer	C21 : 100 µF	C36 : 10 nF	R10 : 470 Ω	TR1 : 2N5320
C5 : 100 pF	C22 : 100 nF	C37 : 220 nF	R11 : 1 KΩ	TR2 : BF965
C6 : 100 nF	C23 : 100 nF	C38 : 100 µF	R12 : 15 Ω	TR3 : 2N2222
C7 : 100 nF	C24 : 100 µF	C39 : 10 nF	R13 : 1 KΩ 1/4 W	TR4 : 2N2222
C8 : 1 nF	C25 : 220 µF	C40 : 10 nF	R14 : 10 Ω	RLY : 12 V 2 exch.
C9 : 100 nF	C26 : 100 nF	C41 : 220 nF	R15 : 470 Ω	D1 : 1N4001
C10 : 100 nF	C27 : 10 µF	R1 : 2.2 Ω 1/4 W	R16 : 47 KΩ pot.	D2 : 1N4001
C11 : 100 µF	C28 : 10 nF	R2 : 5.6 Ω	R17 : 18 KΩ	D3 : 1N4148
C12 : 10 nF	C29 : 10 µF	R3 : 47 Ω 1/4 W	R18 : 1 KΩ	DZ1 : 6.8 V - 1/2 W
C13 : 60 pF trimmer	C30 : 22 nF	R4 : 56 KΩ	R19 : 82 KΩ	U1 : LM386
C15 : 10 nF	C31 : 1 nF	R5 : 82 KΩ	R20 : 10 KΩ	U2 : NE602 / NE612
C16 : 4.7 pF	C32 : 100 nF	R6 : 68 KΩ	R21 : 3.3 KΩ	MICR: preamp. fet
C17 : 10 nF	C33 : 1 nF	R7 : 150 Ω	R22 : 470 Ω	L2 : 22 µH see text
C18 : 10 nF	C34 : see text	R8 : 10 Ω	R23 : 22 KΩ	L5 : 100 µH

- Unless different specification, all resistors should be 1/8 W (also 1/4 W units may fit the PCB), electrolytic capacitors 16 Vl. Toroid cores are from Amidon [(4)].

Band	C1	C2	L1	L3	C14	C19	L4
7 MHz	390 pF	270 pF	17 t. 0.5 mm on T44-6	34 t. 0.3 mm on T44-6, link 5 t. on ground side	68 pF	68 pF	34 t. 0.3 mm on T44-^, center tap, link 2 t. on ground side
14 MHz	220 pF	82 pF	12 t. 0.5 mm on T44-6	21 t. 0.4 mm on T44-6, link 4 t. on ground side	33 pF	33 pF	21 t. 0.4 mm su T44-6 center tap, link 2 t. on ground side

VFO schematics

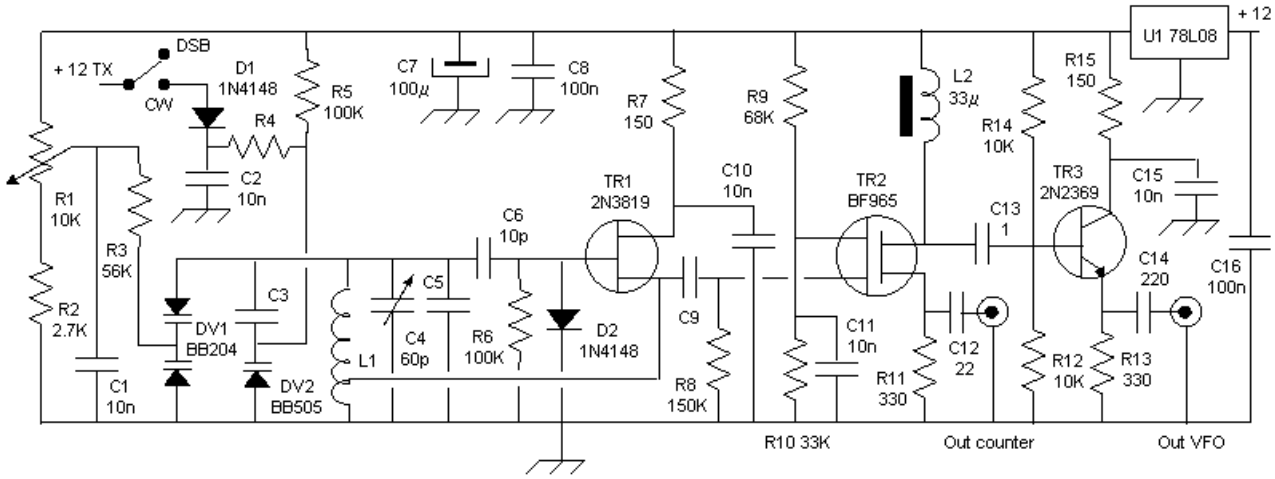

Dealing with a direct conversion circuit, the VFO and the transmitter work on the same frequency, therefore some care must be taken to avoid interference between the two stages. I suggest to put the VFO board into a little tin-plate box (better than aluminium), avoiding to mount it too near the final TX stage.

A varicap controlled Hartley oscillator is employed. So doing we may use a multi turn potentiometer, avoiding variable capacitor and related mechanic gear. A BF965 mosfet isolates the oscillator from the output buffer, a low level signal is derived form the source to drive an external frequency meter. At last an emitter follower (TR3) is used as a buffer toward the RTX board.
To allow CW working, the +12 TX voltage is taken from RTX board and connected to a second varicap (BB505) through a DSB/CW switch. So doing we may obtain the necessary CW shift (about +800 Hz, to verify while tuning the rig).
I suggest coupling this VFO with a digital frequency reader, for example the m-counter presented at my WEB site [(1)], the counter must be carefully shielded to avoid pulse noise into the receiver circuit.

VFO component list:

C1 : 10 nF	C14 : 220 pF	R9 : 68 KΩ	DV2 : BB505
C2 : 10 nF	C15 : 10 nF	R10 : 33 KΩ	TR1 : 2N3819
C4 : 60 pF trimmer	C16 : 100 nF	R11 : 330 Ω	TR2 : BF965
C6 : 10 pF	R1 : 10 KΩ, 10 turn pot.	R12 : 10 KΩ	TR3 : 2N2369
C7 : 100 µF	R2 : 2.7 KΩ	R13 : 330 Ω	U1 : 78L08
C8 : 100 nF	R3 : 56 KΩ	R14 : 10 KΩ	L2 : 33 µH
C10 : 10 nF	R5 : 100 KΩ	R15 : 150 Ω	
C11 : 10 nF	R6 : 100 KΩ	D1 : 1N4148	
C12 : 22 pF	R7 : 150 Ω	D2 : 1N4148	
C13 : 1 pF	R8 : 150 KΩ	DV1 : BB204	

- Unless different specification, all resistors should be 1/8 W (also 1/4 W units may fit the PCB), electrolytic capacitors 16 Vl. Toroid cores are from Amidon [(4)].

Band	R4	C3	C5	C9	L1
7 MHz	82 KΩ	2.2 pF	330 pF NPO	2.2 pF	17 t. 0.5 mm on T50-6, tap at 5 turns from ground connection
14 MHz	220 KΩ	1 pF	120 pF NPO	1 pF	12 t. 0.5 mm on T50-6, tap at 4 turns from ground connection

RTX assembly and tuning

The RTX is assembled on a single side 110x80 mm PCB board. The whole circuit must be put into a metallic box to avoid humming and microphonic effect, common in direct conversion devices, for the same reason the grounding of the PCB must be effective, as shown in the drawing. Note that the TX final stage supply is kept apart from the rest of the circuit, so reducing possible RF feedback and consequent instability, for the same reason the preselector toroids are rotated 90 degrees.
The rig may be set up in the following manner:

- Tune the VFO at the center of the band, and set C4 for its maximum value.
- Ground KEY point (key down)
- Connect a 50 Ω load to TX output
- Switch the rig in TX mode and set C13 - C20 for a maximum output power. The two capacitors should be positioned on an intermediate value; otherwise a little change to C14 or C19 may be required.
- Now switch the rig in RX mode, remove the KEY connection (key up) and connect the antenna.
- Adjust C13 for the maximum sensitivity; in case of strong broadcasting interference you may adjust C4 so as to reduce the undesired signal.
- Verify the output power; it should be about 1.5 W with 300 mA input current.

No instability should arise with the reported component values. However, should the TX exhibit any tendency to self oscillate, you may reduce C16 value, or raise R5.

VFO assembly

The VFO circuit is assembled on a little, single sided, 48x45 mm PCB board. It must be enclosed into a small tin-plate box, suited for RF assembly. A + 8V stabilized output is provided to the R1 potentiometer. Also R2 resistor is located outside directly connected to the tuning potentiometer. To tune the VFO you may use

the external frequency reader, or another receiver. First you have to turn R1 all to the right (max frequency) and adjust C4, if necessary modifying C5 value, so as to tune up at the top of the band. Next turn R1 all to the left so as to read the minimum frequency, if necessary you may vary lightly R2 value. The output level toward NE602 should be about 1 V pp. At last verify the CW shift by applying a +12 V to the CW point, if necessary you may vary slightly R4 value so as to measure about +800 Hz.

CW working

Only in the VFO version it is possible to activate CW mode. You have to connect the key to the KEY point on the RTX board and +12 TX voltage to the CW/DSB switch. To operate CW, you have to tune the received station slightly below its frequency, so as to hear the CW note at about 800 Hz. When transmitting, the VFO will automatically raise its frequency accordingly.

An optional CW module

You may add to the rig this optional CW module performing the automatic RX/TX switching and CW monitor function. The RX/TX relay is activated when you press the PTT switch, now connected to U1a gate, or when U1b gate detects a "KEY DOWN" condition, a delay circuit (R5, C3) keeps the relay "on" for about 500 ms after KEY releasing. The same "KEY DOWN" condition brings "low" the TR2 collector, which is connected to the "KEY" pin on the RTX board, and activates the U1d oscillator, so performing the CW monitor function.

The module delivers the "+ 12 RX" e "+ 12 TX" volts to the RTX board.

CW module schematics

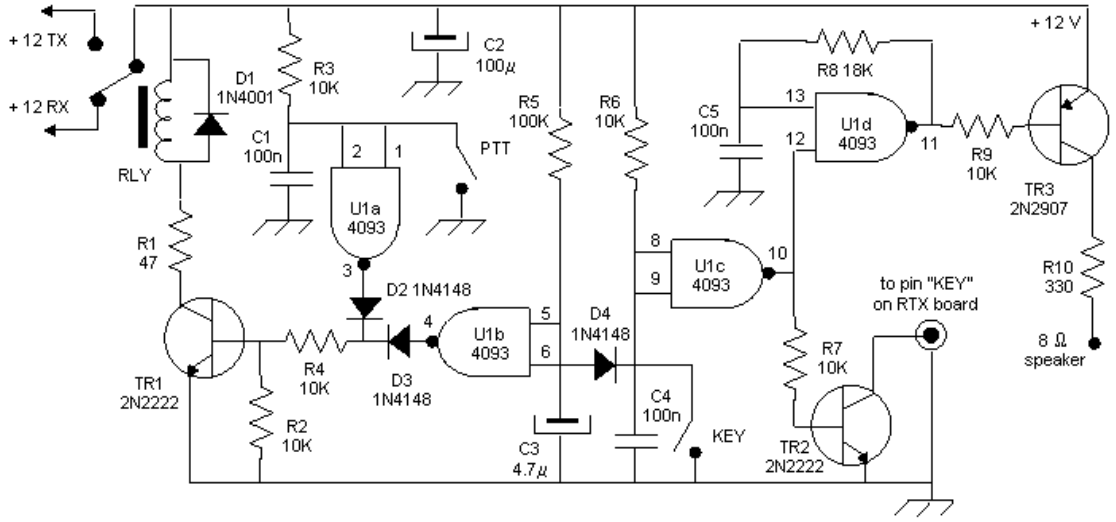

CW module components list:

C1 : 100 nF	R1 : 47 Ω	R6 : 10 KΩ	D1 : 1N4001	TR1 : 2N2222
C2 : 100 µF	R2 : 10 KΩ	R7 : 10 KΩ	D2 : 1N4148	TR2 : 2N2222
C3 : 4.7 µF	R3 : 10 KΩ	R8 : 18 KΩ	D3 : 1N4148	TR3 : 2N2907
C4 : 100 nF	R4 : 10 KΩ	R9 : 10 KΩ	D4 : 1N4148	U1 : 4093
C5 : 100 nF	R5 : 100 KΩ	R10 : 330 Ω	RLY : 12 V 1 exch.	

- Unless different specification, all resistors should be 1/8 W (also 1/4 W units may fit the PCB), electrolytic capacitors 16 Vl.

Finally

While projecting this rig I tried to achieve a simple, easy to build equipment, which doesn't require special knowledge or tools. However you may contact me for any doubt or question at my WEB site www.ik3oil.it (where you may find other home-brewing projects) or by E-mail at my address ik3oil@arrl.net.

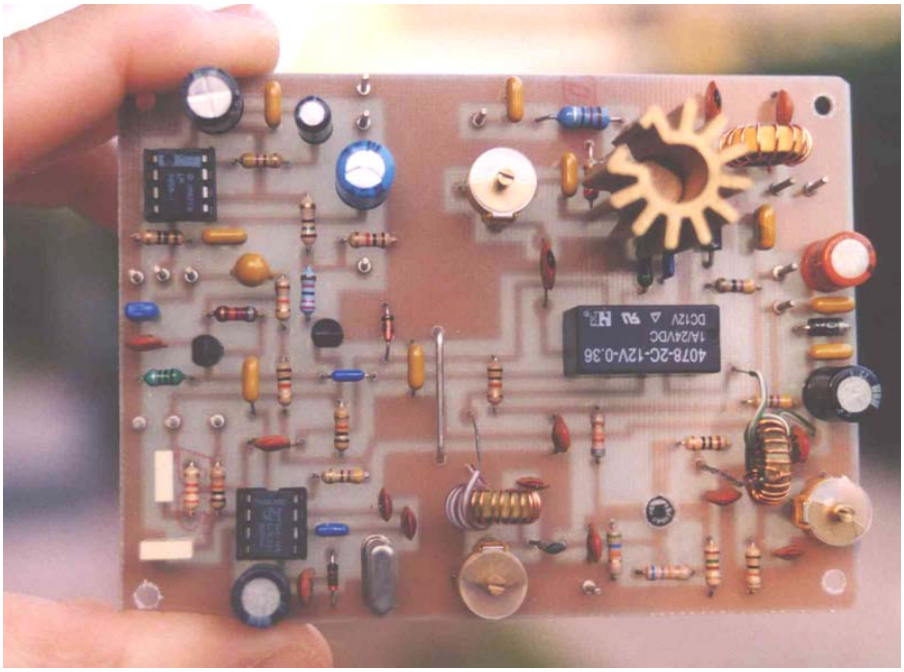

Photo of the RTX board

DSP project build by Andre ZS2ACP

References

1. PIC mCounter : a little PIC16F84 based programmable counter, see at my WEB site www.ik3oil.it
2. NE602 Datasheet : http://www.phillipssemiconductors.com/cgi-bin/pldb/pip/NE602AD
3. LM386 Datasheet : http://www.national.com/pf/LM/LM386.html
4. Amidon toroidal cores : http://www.bytemark.com/products/material.htm

##########

Sign at an Optometrist's Office:
"If you don't see what you're looking for, you've come to the right place."

Pick-Up-and-Go (Part 3 - Putting It All Together)

with Paul Galpin ZS2PG

Continued from QSX February 2009

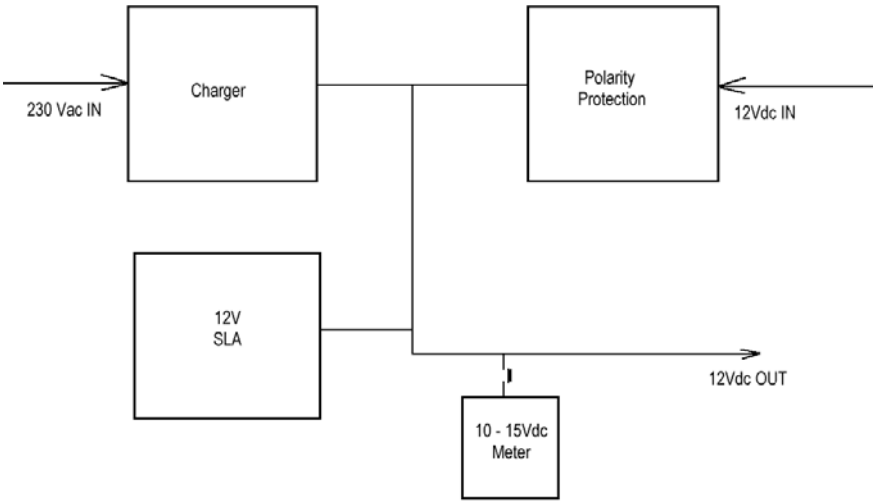

You will need a strong box, metal or plastic, capable of holding the battery, charger, and protection relay. If it's large enough, then it could also hold a loudspeaker – the built-in speakers on some rigs are not great quality!

Since there's battery-charging going on inside, it's not a bad idea to have some ventilation holes. But it is very important to not allow the battery volts to go above 13.8. Any higher, and it is in the gassing part of the charge curve, with resulting corrosion problems.

On the front panel: -

1. Controls would be 230V On/Off, and Ext 12V On/Off
2. Room should be found for the meter, and its push-button
3. A fuse in the battery line, and perhaps the Ext 12V line will make for safety against accidental short-circuits.
4. LEDs are useful for indicating the presence of volts from the charger, and the ext 12V
5. Connectors fitted for Ext 12V, and 12v Output
6. IEC ("Kettleplug") Connector or cable for 230V.
7. Connector for speaker, if fitted.

Now you have a ready kit to pick-up-and-go whenever and wherever you want

All you need is

1. The box
2. 12V lead to fit the rig
3. Mains lead
4. Twin flex and croc-clips for an external battery
5. Magmount antenna and coax to fit the rig
6. Loudspeaker (if fitted) lead from the rig to the box.

##########

DIARY OF EVENTS

1 March	SARL Hamnet 40 m Emergency Contest CQ 160 m SSB
2 March	Closing date HF Field Day logs
7-8 March	ARRL International DX SSB
14-15 March	RSGB Commonwealth contest
15 March	North American Spring RTTY
16 March	Closing date Hamnet logs
17 March	PEARS Monthly Meeting
21 March	Human Rights Day
21-22 March	SARL VHF/UHF Contest Russian DX SSB/CW
28-29 March	CQ WW DX WPX SSB
2 April	SARL 80 metre QSO Party
10 April	Good Friday

Sunday Bulletins

PEARS bulletins are transmitted on Sundays immediately after the SARL English transmission, i.e. at about 08:45 on 7098 kHz as well as the 2 metre linked network that provides from Butterworth to George and up to the Free State and their environs. PEARS 7098 or 3640 kHz transceiver facilities are also remotely linked as needed. In addition, the SARL's 40m operations on 7082 or 7066 kHz or Hamnet's 7070 kHz can be remotely patched to the 2m network in receive only mode or with full transceive capability for interactive events.

Bulletin Roster

1st March	Beavan	ZS2RL
8th March	Clive	ZS2RT
15th March	Barry	ZS2EZ
22nd March	Eric	ZS2ECH
29th March	Bill	ZS2ABZ
5th April	Glen	ZS2GV
12th April	Basie	ZR2BA

The bulletin readers are always looking for something to announce. If you have something to contribute, please forward it to the next reader.

CONGRATULATIONS

BIRTHDAYS – March

01 Rudi Goossens ZR2RCG
03 Daphne Galpin, XYL of Paul ZS2PG
13 Magret Ras, XYL of Martin ZS2MR
15 Susanna Bosch, XYL of Mike ZS2FM
15 John Williscroft ZS6EF
16 Anne Butcher, XYL of Graham ZS2GIB
21 Andrew Gray ZS2G
22 Peggy Moore, XYL of Viv ZS2VM
27 Hilton Johnson ZR2HOT
29 Allan Whitehead, ZS2R
31 Terence van der Linden, ZS2VDL

BIRTHDAYS – April

01 Rosalie van Loggerenberg ZR2RL, XYL of Donovan ZS2DL
01 Joan Jackson, XYL of Barry ZS2H
03 Theunis Potgieter ZS2EC
04 Barbara Hickson, XYL of Bill ZS2BIL
05 Heather Hoole, XYL of James ZS2ABM
05 Willie Bosch ZS2W
05 Re (Ray) Martin, XYL of Saney ZR1S
05 Mike Jones, ZS2MJ
10 Neels Du Plessis ZS2ND

ANNIVERSARIES – March

03 Anne and Graham Butcher ZS2GIB
03 Teresa and Tim Joubert ZS2X
04 Pamela and Jack Koen ZR1JAC
18 Roslyn and Andrew Prideaux ZS2PA
21 Maureen and Neil Fulton, ZS2MG
22 Ellie and Rudi Goosens ZR2RCG
27 Shaunna and Gary Laaks ZS2GRL

ANNIVERSARIES - April

04 Vanessa and Glen Cummings, ZS2GV
06 Kathy and Wolfgang Gerstle ZS2WG
08 Colette and Mitch Rundle ZS2DK
09 Charmaine and Otto van Rooyen ZS2Q
17 Lisa and Grant Currin ZR2GEC
21 Elizabeth ZR2EJ and Joe Jasson ZS2JLJ

If your birthday or anniversary details are omitted or incorrect, please notify Clive ZS2RT (or any committee member) and he will update our records.

Your Society's Committee

Committee

Chairman & Elmer	Donovan van Loggerenberg ZS2DL	082-8524885	zs2dl@hamradio.co.za
Vice Chair, Repeaters & Technical	Chris Scarr ZS2AAW	041-3681344	zs2aaw@pears.ham-radio-op.net
Secretary & Rallies Admin	Beavan Gwilt ZS2RL	041-3688810	bgwilt@iburst.co.za
Treasurer	Clive Fife ZS2RT	041-3673203	zs2rt@pears.ham-radio-op.net
Social & Technical Support	Glen Cummings ZS2GV	082-4112743	zs2gv@pears.ham-radio-op.net
Marketing & PR	Basie DuPlessis ZR2BA		zr2ba@pears.ham-radio-op.net
Catering at meetings	Bill Hodges ZS2ABZ	041-5812580	hodges@absamail.co.za
Youth Development & Mountain Club Liaison	Eric Hosten ZS2ECH	041-3681505	zs2ech@pears.ham-radio-op.net
Website, Awards & Guest Speakers	Barry Murrell ZS2EZ	041-5813561	zs2ez@zs2ez.co.za

Co-opted sub-committees

RAE Classes Admin	Donovan ZS2DL	0828524885	zs2dl@hamradio.co.za
Class A (ZR) Training	Paul Galpin ZS2PG	041-3721779	galpinp@absamail.co.za
Class B (ZU) Training	Donovan ZS2DL	0828524885	zs2dl@hamradio.co.za
Assessors	Rory Norton ZS2BL, Chris Scarr ZS2AAW, Donovan ZS2DL, Bill ZS2ABZ		
Contests	Barry ZS2EZ, Al ZS2U, Mike ZS2FM		
QSX Editor	Ashley ZS2AG	082-3726696	Fax 0865416386
QSX Mailing	Mitch ZS2DK	083-7153375	

PEARS' VHF/UHF, Packet & Other Services

Local Repeaters:

Town VHF	Town UHF	Uitenhage	Tygerhoek
145.050/650	431.050/438.650	145.075/675	145.000/600

These repeaters form a separate sub-net in the PE - Uitenhage - Despatch area

Cape Linked System Repeaters:

Lady's Slipper	Grahamstown	Cradock	Noupoort
145.100/700	145.150/750	145.050/650	438.750 X 438.675
Colesberg	**Kareedouw**	**Plett**	**Brenton**
431.075/438.675	145.725/125	145.775/175	145.675/075

These form the PEARS long-range 2-metre repeater system, in conjunction with the Border, Southern Cape and WCRWG systems

Packet network:

ZS0NTP-2 Packet Node Lady's Slipper 10.151 LSB 300bd APRS 144.625 1200bd 438.275 1200bd (FWD) 434.875 9600bd 434.800 1200bd APRS Cape Linked System	**ZS0NTP BBS** Lady's Slipper On all node frequencies	**ZS0GHT-2 Packet Node** Grahamstown 144.675 1200bd 438.275 1200bd (FWD) 434.875 9600bd	**ZS0CDK-2 Digi** Cradock 144.675 1200bd
	ZS0KDJ APRS Digi Mount Road 434.800 1200bd	**ZS0KDB APRS Digi** Longmore 434.800 1200bd	**ZS2ABZ-4** WMR918 WX Station 144.625 1200bd

Beacons:

2M Beacon (ZS2VHF CW ID, FSK) horizontally polarised 25W ERP 144.415 (inactive)

6M Beacon (ZS2SIX CW ID, FSK) horizontally polarised 25W ERP 50.005 (inactive)

Banking details *(for subs & donations):* NEDBANK SAVINGS ACCOUNT No. 221 252 7594, Code 121217 (main branch). Please use call signs as a reference.

See the PEARS web site at www.zs2pe.co.za for further details and network diagrams.

QSX-PE - *Newsletter for the discerning Radio Ham*

TO:

IF NOT DELIVERED
RETURN TO

Port Elizabeth Amateur Radio Society,
PO Box 10402
LINTON GRANGE
6015

AMATEUR RADIO is the hobby for RADIO EXPERIMENTERS and those who like to fiddle with ELECTRONICS, COMMUNICATIONS or COMPUTERS